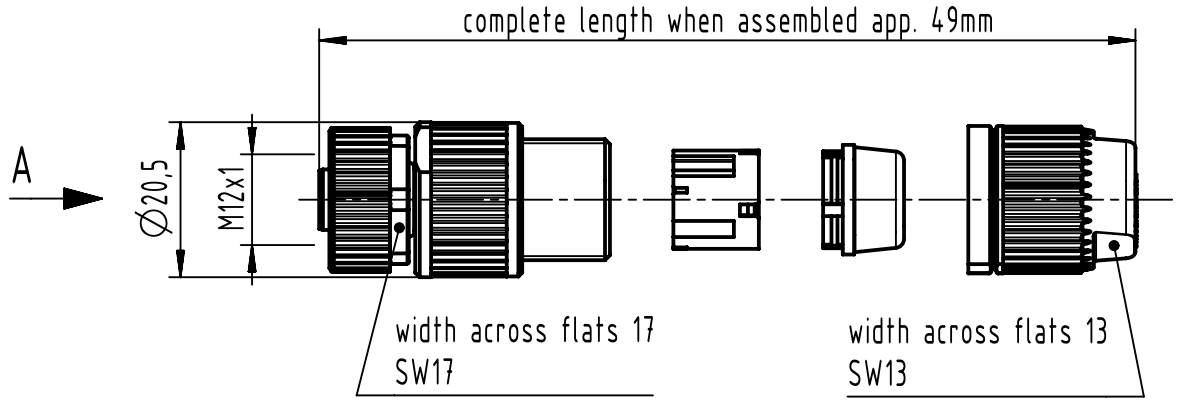

contact face based on
IEC 61076-2-101

A (2:1)

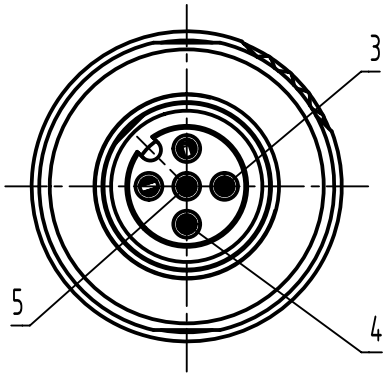

cable outside diameter	conductor cross section
6,0mm - 8,0mm	AWG22 - AWG18 0,34mm² - 0,75mm²

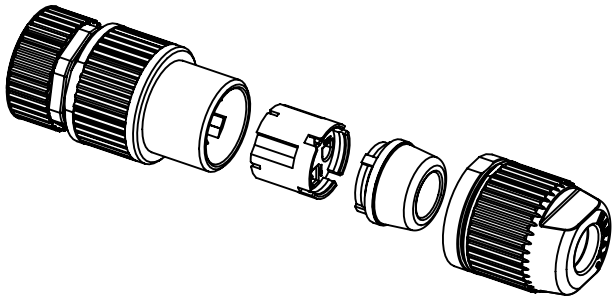

All Dimensions in mm
Original Size DIN A4

Scale 1:1

Free size tol.

Ref.

Sub.

All rights reserved

Department EL PD

Created by HASSE

Inspected by 104122

Standardisation

Date 2021-12-15

State Final Release

Title M12-L-CC-IDC-3P-ACOD-F-STR

Doc-Key / ECM-Nr.
100191038/UGD/002/E
500000207119

HARTING
D-32339 Espelkamp

Type TB

Number 21032122400

Rev. E

Page 1/1

A4